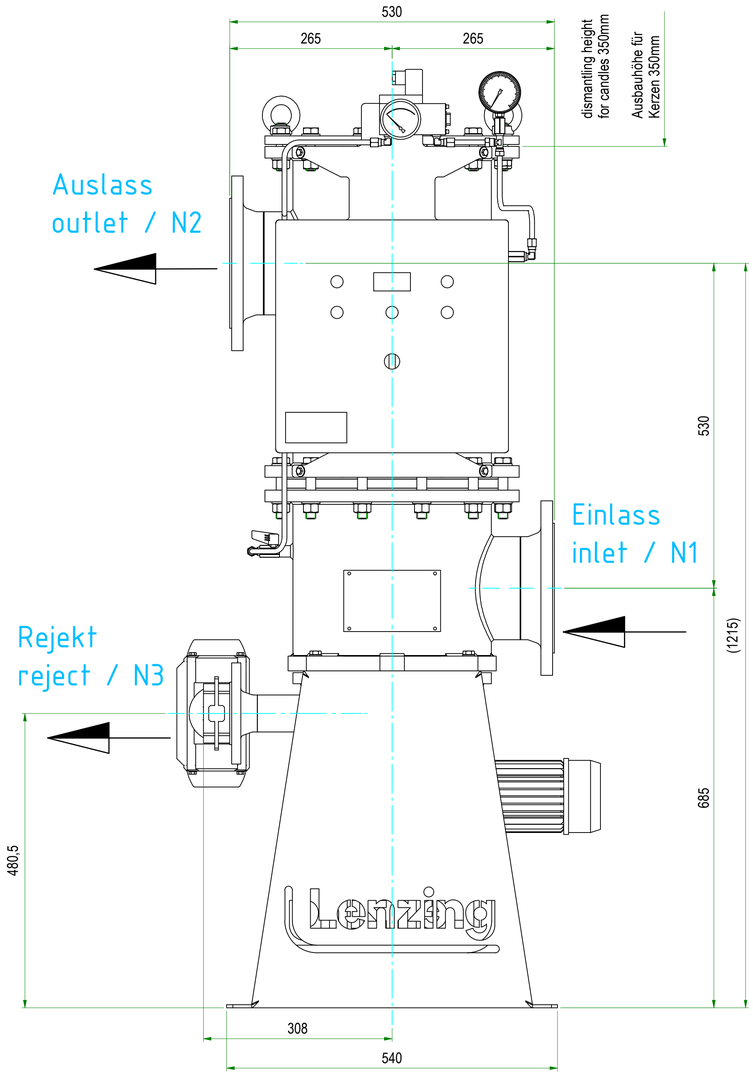

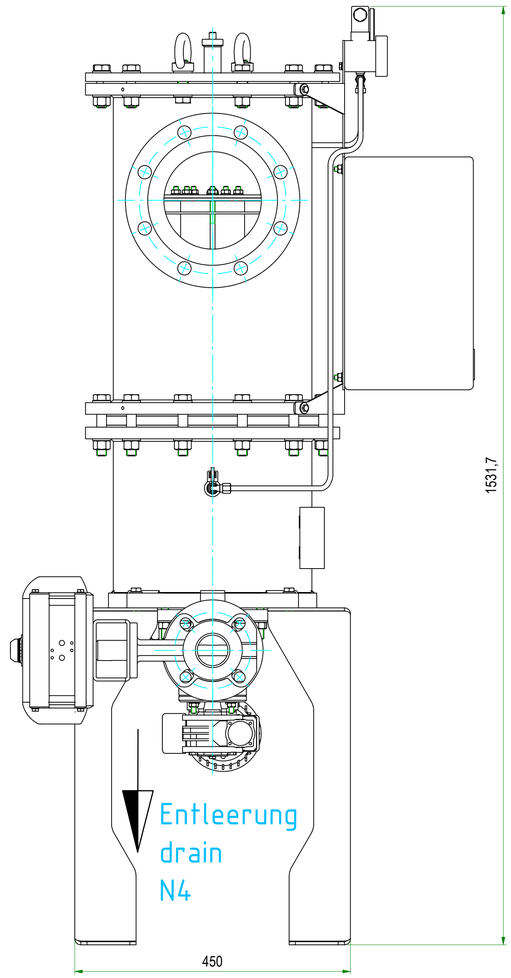

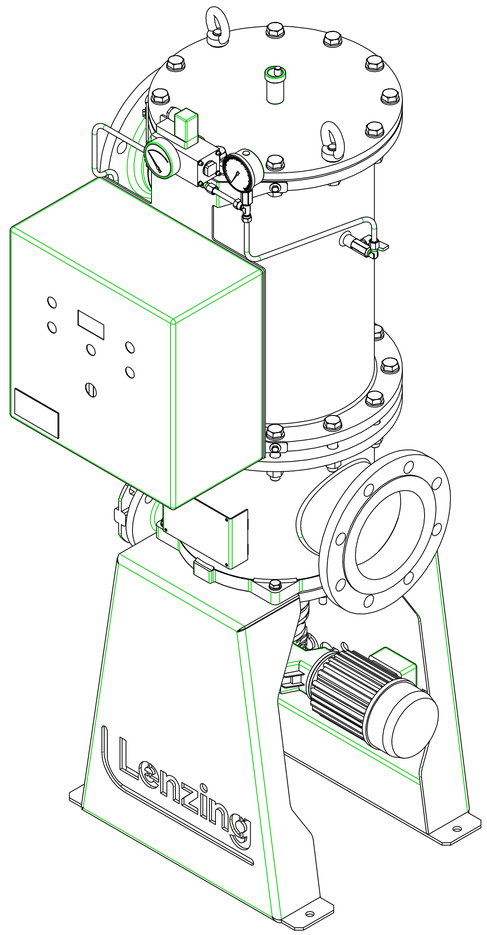

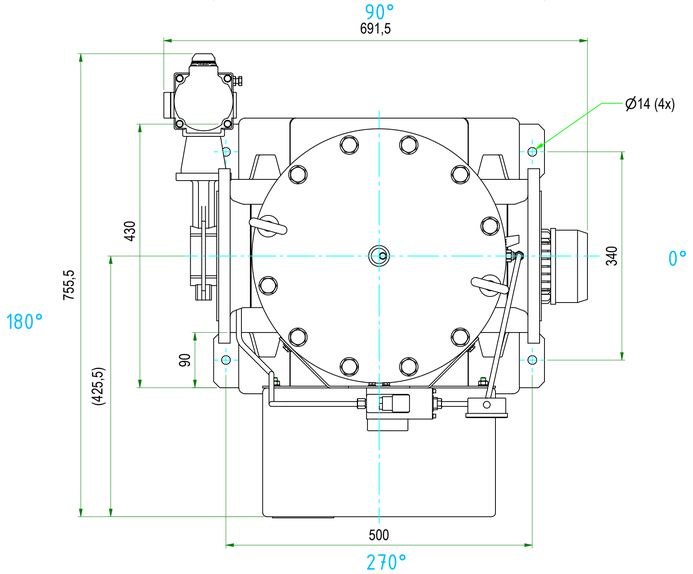

Please refer to the customer specific manual for the exact position of the inlet, outlet and reject as well as the position of the control box.

Die genaue Stutzenstellung von Einlauf, Auslauf und Rejekt sowie die Position des Steuerkastens entnehmen Sie bitte der kundenspezifischen Betriebsanleitung.

Stutzentabelle / nozzle table

No.	Dim.	PN	Norm spezification	Benennung / description	Standard Ausrichtung Standard position	Optionale Ausrichtung Optional position	Bedingungen / Restrictions
N1	DN 150	PN10	DIN EN 1092-1	Einlauf / inlet	0°	90°, 180°, 270°	≠ Rejekt / reject
N2	DN 150	PN10	DIN EN 1092-1	Auslauf / outlet	180°	0°, 90°, 270°	≠ Steuerung / Control board
N3	DN 50	PN16	DIN EN 1092-1	Rejekt / reject	180°	0°, 90°, 270°	≠ Einlauf / Inlet
N4	R 1/2"		DIN EN 10241	Entleerung / draining			
				Steuerung / Control board	270°	0°, 90°, 180°	≠ Auslauf / Outlet

rev.	date	approved	designer	modification text
4	04.03.2020	LAGGRP\LTGHUC	LAGGRP\LTGHUC	ins Vault übertragen

Created by: ltghuc
Checked by:
Approved by: LAGGRP\LTGHUC

Lenzing
Innovative by nature

DIE MEHRWERT MACHER.
HENNLICH
+43 7712 / 2163 - 0
filtertechnik@hennlich.at

Document type: assembly drawing
Confidentiality: -
Material number:
DCC:
Projection method ISO5456

Description:
Aufstellungszeichnung
Installation drawing
CanFil-300

Weight: 188 kg
Scale: 1 : 5

Document status	Date of first issue	Date of latest issue	Plant classification	Format	Sheet	Drawing Number	Rev.
Released	02.10.2019			A1	1/1	473784	4

Lenzing Group Company

All rights reserved. No part of this Document may be reproduced, stored in a retrieval system of any nature, or transmitted in any form or by any means including photocopying and recording, without the prior written permission of the Lenzing Group Company, the intellectual property rights owner. If any unauthorized acts are carried out in relation to this Document, a civil claim for damages may be made and / or a criminal prosecution may result.

INVENTOR